CUSTOMER SIGNATURE

修改日期 DATE	版次 VERSION	變更內容 REVISION

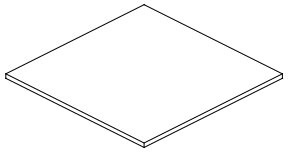

Cardboard
142-24200-00200
(420mmx420mmx3mm)(1)

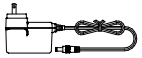

Adapter
GPSU18X, 25X, 40X_UI, SAI
GMPU18X, 30X, 40X, 60X_UI,SAI
APSU60X_UI,SAI
GLV30X
GLV60X

White Box
142-41000-00400
(105mmx65mmx85mm)(12)
Lenght x Width x Height

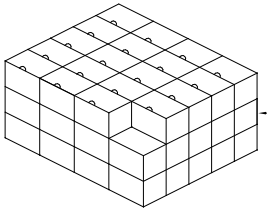

5x4X3=60PCS Per carton

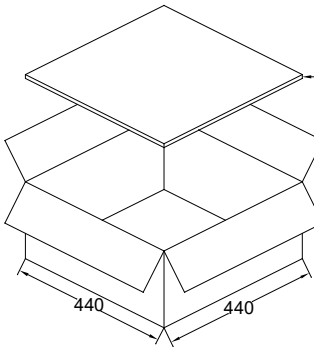

Cardboard
142-24200-00200
(420mmx420mmx3mm)(1)

Carton
142-14400-00100
(440mmx440mmx216mm)(1)

*GPSU18_ Wall mount; GPSU18UI; GPSU18SAI
N.W.: 10Kgs
G.W.: 12Kgs

*GPSU25_ Wall mount; GPSU25UI; GPSU25SAI
N.W.: 11Kgs
G.W.: 13Kgs

*GPSU40_ Wall mount; GPSU40UI; GPSU40SAI
N.W.: 12Kgs
G.W.: 14Kgs

*GMPU18_ Wall mount; GMPU18UI; GMPU18SAI
N.W.: 10Kgs
G.W.: 12Kgs

*GMPU30_ Wall mount; GMPU30UI; GMPU30SAI
N.W.: 12Kgs
G.W.: 14Kgs

*GMPU40_ Wall mount; GMPU40UI; GMPU40SAI
N.W.: 12Kgs
G.W.: 14Kgs

*GMPU60_ Wall mount; GMPU60UI; GMPU60SAI
N.W.: 12.5Kgs
G.W.: 14.5Kgs

*APSU60_ Wall mount; APSU60UI; GPSU60SAI
N.W.: 12.5Kgs
G.W.: 14.5Kgs

*GLV30_Wall mount
N.W.: 10Kgs
G.W.: 12Kgs

*GLV60_ Wall mount
N.W.: 11Kgs
G.W.: 13Kgs

PACKING: 60 PCS / CARTON
CARTON : L 440mm , W 440mm , H 216mm

育鈺科技股份有限公司 ELJINTEK, INC.	繪圖 DWG.BY.	校對 CHK.BY.	安規人員確認 Agency approvals CHK.	承認 APP.BY.	TOLERANCE	材質 MATERIAL	圖稱 DWG.TITLE	日期 DATE	2020/07/17			MODEL		
							PACKING	比例 SCALE	NONE	單位 UNIT	m/m	正式圖面 Final DWG.	圖號 DWG.NO.	171-20600-00200
						處理 FINISH		修訂 REVISION	6	角位 ANGLE		非正式圖面 Temporary DWG.	編號 SERIAL	171-0149-01