CUSTOMER SIGNATURE

修改日期 DATE	版次 VERSION	變更內容 REVISION

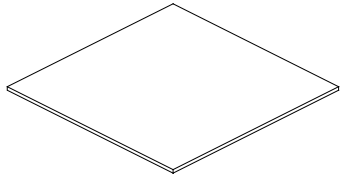

Cardboard
142-24200-00200
(420mmx420mmx3mm)(1)

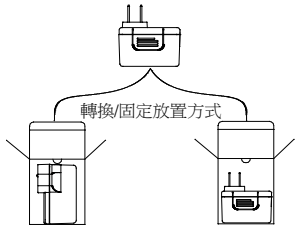

Adapter
GPSU12U/E-USB
GPSU12XI-USB (interchangeable)
GMPU06XI-USB (interchangeable)
GMPU12U/E-USB
GMPU12XI-USB (interchangeable)
APSU06U/E
APSU06_12_15_18 U/E-USB
APSU06_12_15_18 XI-USB (interchangeable)

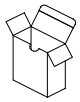

White Box
142-40660-00100
(69mmx36mmx80mm)(18)
Lenght x Width x Height

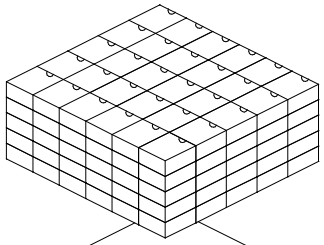

5x6X5=150PCS Per carton

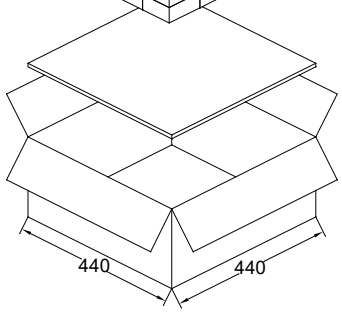

Cardboard
142-24200-00200
(420mmx420mmx3mm)(1)

Carton
142-14400-00100
(440mmx440mmx216mm)(1)

GPSU12U/E-USB
N.W.: 11.5Kgs
G.W.: 13.5Kgs

GPSU12XI-USB (interchangeable)
N.W.: 12Kgs
G.W.: 14Kgs

GMPU06XI-USB (interchangeable)
N.W.: 12Kgs
G.W.: 14Kgs

GMPU12U/E-USB
N.W.: 11.5Kgs
G.W.: 13.5Kgs

GMPU12XI-USB (interchangeable)
N.W.: 12Kgs
G.W.: 14Kgs

APSU06U/E
N.W.: 15Kgs
G.W.: 17Kgs

APSU06U/E-USB
N.W.: 11.5Kgs
G.W.: 13.5Kgs

APSU12U/E-USB
N.W.: 11.5Kgs
G.W.: 13.5Kgs

APSU15U/E-USB
N.W.: 14.5Kgs
G.W.: 16.5Kgs

APSU18U/E-USB
N.W.: 17.5Kgs
G.W.: 19.5Kgs

APSU06XI-USB (interchangeable)
N.W.: 11.5Kgs
G.W.: 13.5Kgs

APSU12XI-USB (interchangeable)
N.W.: 11.5Kgs
G.W.: 13.5Kgs

APSU15XI-USB (interchangeable)
N.W.: 14.5Kgs
G.W.: 16.5Kgs

APSU18XI-USB (interchangeable)
N.W.: 17.5Kgs
G.W.: 19.5Kgs

PACKING: 150 PCS / CARTON
CARTON : L 440mm , W 440mm , H 216mm

育鈺科技股份有限公司 ELJINTEK, INC.	繪圖 DWG.BY.	校對 CHK.BY.	安規人員確認 Agency approvals CHK.	承認 APP.BY.	TOLERANCE	材質 MATERIAL	圖稱 DWG.TITLE	日期 DATE	2020/01/08			MODEL		
							PACKING	比例 SCALE	NONE	單位 UNIT	m/m	正式圖面 Final DWG.	圖號 DWG.NO.	171-21500-00100
						處理 FINISH		修訂 REVISION	3	角位 ANGLE		非正式圖面 Temporary DWG.	編號 SERIAL	171-0170-01

P002-1B